Cleveland

COOK CHILL SYSTEMS

Cook/Chill Systems

Project ____

Item ____

Quantity ____

FCSI Section ____

Approval ____

Date ____

COMBINATION TUMBLE CHILLER/ COOK TANK

MODEL: ☐ TCCT-120-CC

Cleveland Standard Features

- Load capacity for up to; 120 gallons of pumpable product, 750 lbs. of meat
- Combination System greatly reduces valuable kitchen floor space used
- Two pen Chart Recorder for permanent record of time and temperature for both Water Bath and Product
- Selector Switch for Timed or Meat Probe operation
- Programmable Time/Temperature Controls
- Digital Temperature Displays
- Thaw Timer for thawing frozen products before cooking
- Preprogrammed Power Failure Controls for Food Safety
- Steam heated Tank with 50 psi Steam Jacket pressure rating
- Electric driven, perforated, Product Cylinder
- Hinged Cover totally encloses Rotating Inner Cylinder
- Safety Interlock Switch stops cylinder rotation when cover is even slightly lifted
- Two Wire Divider Shelves and one Top Hold-down Rack to keep product in place
- Preset water levels for cooking and cooling
- Shell and Tube Heat Exchanger for fast cooling of products
- Meat Probe for automatic cooking and cooling
- Water Circulating Pump for even Water Bath Temperature
- Manual Override "start/stop" Button
- All electrical and plumbing enclosed in a Stainless Steel Housing
- Accepted for use in U.S.D.A. Inspected Facilities

chefsource

Short Form Specifications

Shall be CLEVELAND, Model: TCCT-120-CC, Combination TUMBLE CHILLER/COOK TANK; 750 lbs. or 120 gallons of product capacity; electric driven perforated Product Cylinder; preset water levels; Meat Probe; Water Circulating Pump; two pen Chart Recorder; programmable Time/Temperature Controls; Digital Temperature Displays; All electrical and plumbing enclosed in a Stainless Steel Housing.

Options & Accessories

- ☐ Vacuum Packaging unit (Clipper Vac)
- ☐ Ice Builders
- ☐ Condensing units for Ice Builders
- ☐ Ice Water Control Panel
- ☐ Steam Boilers
- ☐ Spare Meat Probe
- ☐ Flow Meter for chilled water loop
- ☐ Air Power Vacuum Clipper.

1333 East 179 St.,
Cleveland, Ohio, U.S.A. 44110
Tel: 1-216-481-4900
Fax: 1-216-481-3782
Web Site: www.ClevelandRange.com
Email: Steam@ClevelandRange.com

Manitowoc

MINIMUM CLEARANCE	
FRONT	36"
SIDE	12"
REAR	18"

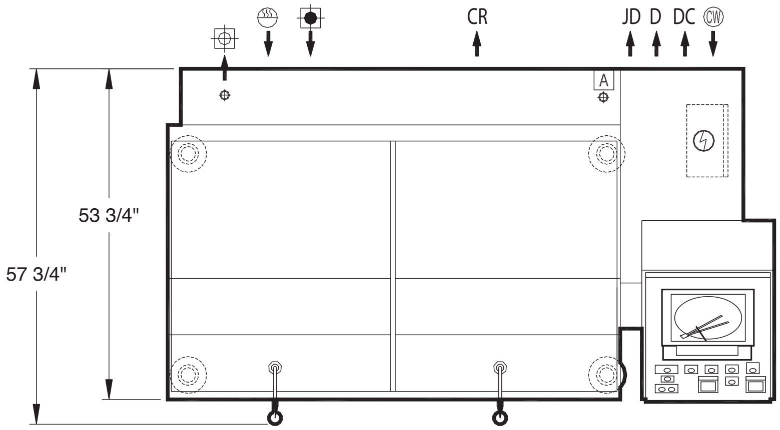

PLAN VIEW

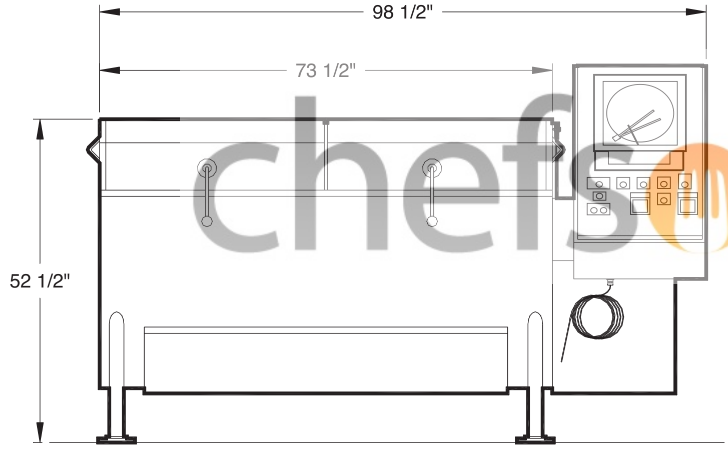

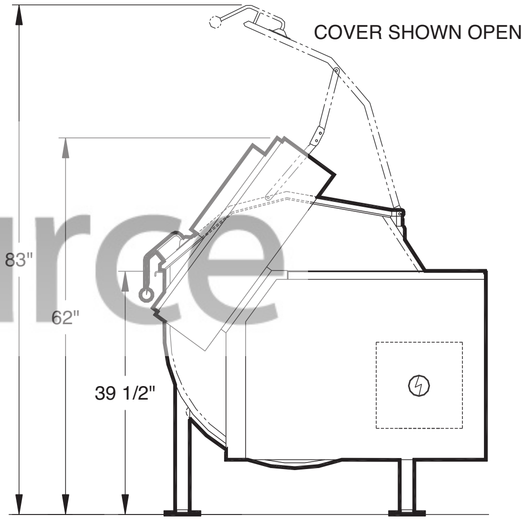

FRONT VIEW

SIDE VIEW

chefsource

UTILITY CONNECTIONS

MODEL	CHILLED WATER INLET	CHILLED WATER RETURN	COLD WATER	STEAM	CONDEN -SATE RETURN	TANK DRAIN	COLD WATER DRAIN	JACKET DRAIN	ELECTRICAL 208/3PH	AIR
			CW		CR	D	DC	DJ		A
TCCT-120	1 1/2" NPT 60 GPM	1 1/2" NPT	1" NPT 30 GPM	1" NPT, 45 PSI 350 lbs/hr	3/4"	1 1/2" NPT	1" NPT	3/4" NPT	13 AMPS	3/8" NPT 30 PSI

NOTE: The pressure drop is 12 to 15 PSI for steam and chilled water passing through the combination tumble chiller - cook tank.

(NOT TO SCALE)

0609
Litho in USA

Cleveland Range reserves right of design improvement or modification, as warranted.